HYDRIA™ WATER



SPIRAL SCREEN SS

Spiral Screen SS separates, washes and dewaters solid particles, screenings and debris from water.

HYDRIA™ WATER

SPIRAL SCREEN SS

The product has a simple design that is suitable for narrow channels and tanks or for lower flows with requirements for compact installation and where space is a premium. The spiral screen consists of a rotating spiral with brush that cleans the screen basket. The screen basket is made from perforated plate.

FUNCTIONS

- Design of strong high-quality material.
- Built-in washing, pressing and shredding.
- Joint operation of screen and screenings press.
- Entirely enclosed, safe and hygienic.
- Suitable for narrow channels with stable, low-concentration flows and simpler applications.

SPECIFICATIONS

Discharge height	<5 m
Diameter	300-500 mm
Perforation (Ø)	2-8 mm
Capacity	<130 l/s
Drive unit	SEW/Nord
Material	EN 1.4301, EN 1.4404

HYDRIA™ WATER

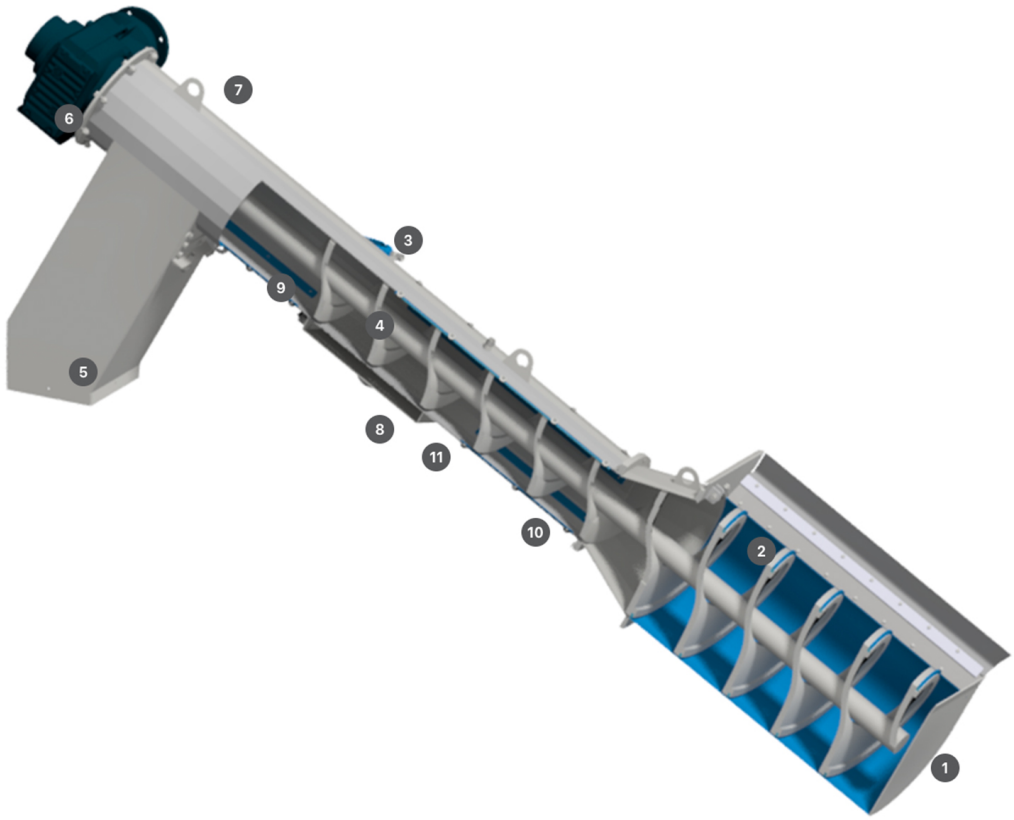

EXPLODED VIEW

1. Screen basket, 2-6 mm perforation

2. Adaptive screen basket extending the interval for brush replacement

3. Washing connection to achieve high dry solids (DS) levels

4. Press zone

5. Outlet for compressed, washed, and dewatered debris

6. Star transmission to protect the gearbox from impact loads

7. Lifting points

8. Specially designed machine frame for easy maintenance

9. Bolted hardox wear steel inserts, replaceable over time

10. Hygienic chassis for easy cleaning and rinsing

HYDRIA™ WATER

11. Reject water connection allowing press water to be redirected before screen or filter for ensured filtration

HYDRIA™ WATER